Connection to the future

article#	**523-6**
article description	**CEE-wall mounted plug 32A 3p 6h IP44**
description long	CEE-wall mounted plug 32A 3p 6h IP44 housing material: PA6 rated current: 32A number of poles: 3 (2P+PE) clock-position: 6h rated voltage/frequency: 200-250V~ / 50+60Hz contacts: brass connection technology: screw terminals IP protection class: IP44
GTIN (EAN)	9003399059643
country of origin	AT
customs number	85366990
net weight	0.212 kg
packaging quantitiy	10
minimum order quantitiy	10

ETIM 9.0	EC001319
IEC-amperage	32 A
Voltage according to EN 60309-2	230 V (50+60 Hz) blue
Number of poles	3
Clock hour position	6 h
Identification colour	Blue
Degree of protection (IP)	IP44
Connection system	Screwed terminal
Construction type	Surface mounted device plug
Phase inverter	False
Angle of plug	Angled
Material	Plastic
Contact material	CuZn
Surface treatment contacts	Untreated

a	131 mm
b	82 mm
wire flexible	2,5-6 mm²
wire solid	2,5-10 mm²
contact screws	110 Ncm
housing screws	110 Ncm
connecting screws	110 Ncm
dismantling length	50 mm
stripping length	12-14 mm
ambient temperature	-25 – 40 °C
temperature resistance	-25 – 80 °C

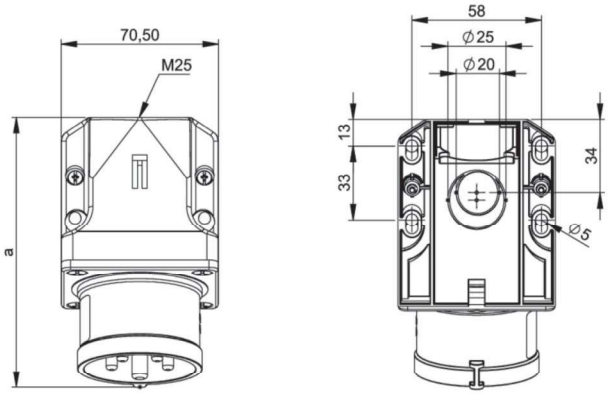

b=Höhe/height
Neigung/angle=15°

https://www.pcelectric.at/shop/en/?func=detail&artnr=523-6

Changes and printing errors reserved!

8/1/2023